SAMSUNG CONFIDENTIAL
THIS DOCUMENT CONTAINS CONFIDENTIAL
PROPRIETARY INFORMATION THAT IS
SAMSUNG ELECTRONICS CO'S PROPERTY.
DO NOT DISCLOSE TO OR DUPLICATE FOR OTHERS
EXCEPT AS AUTHORIZED BY SAMSUNG.

SM-A528B_REV02

2021.06.29

Sheet01 : GSM / WCDMA / LTE / NR(N41) RF
Sheet02 : TRANSCEIVER, SUB ANT
Sheet03 : CONNECTIVITY(BT/WIFI), NFC
Sheet04 : AP(SM7325-INTERFACE,GPIO)
Sheet05 : AP(POWER), MEM(uMCP)
Sheet06 : PMIC(PM7325,PM7350C), IF PMIC
Sheet07 : AUDIO Codec, SENSOR, SIM, SD
Sheet08 : CAMERA
Sheet09 : DISPLAY PMIC, C2C

Engineer:
Drawn by:
R&D CHK:
DOC CTRL CHK:
MFG ENGR CHK:
QA CHK:
TITLE: A52
Size:
REV
Drawing Number:
Page:
Changed by: user33
Date Changed:
Time Changed:

SAMSUNG CONFIDENTIAL
THIS DOCUMENT CONTAINS CONFIDENTIAL
AND PROPRIETARY INFORMATION OF
SAMSUNG ELECTRONICS CO. LTD. PROPERTY.
DO NOT DISCLOSE TO OR DUPLICATE FOR OTHERS
EXCEPT AS AUTHORIZED BY SAMSUNG.

RF PART 1

MAIN ANT1

LB

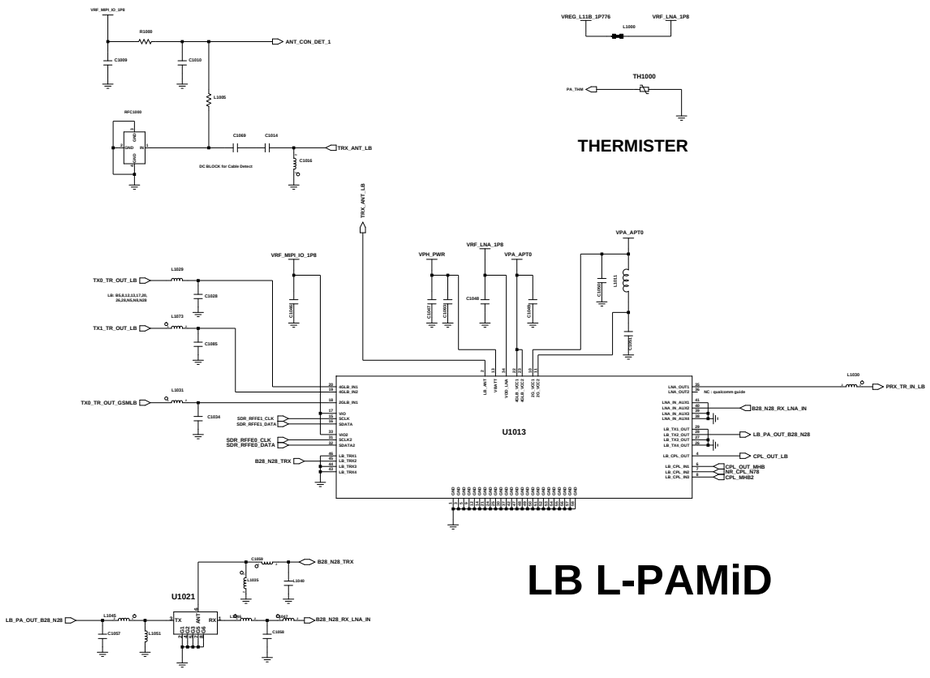

LB L-PAMiD

MAIN ANT2

MHB, n41_n78_n79 DRX

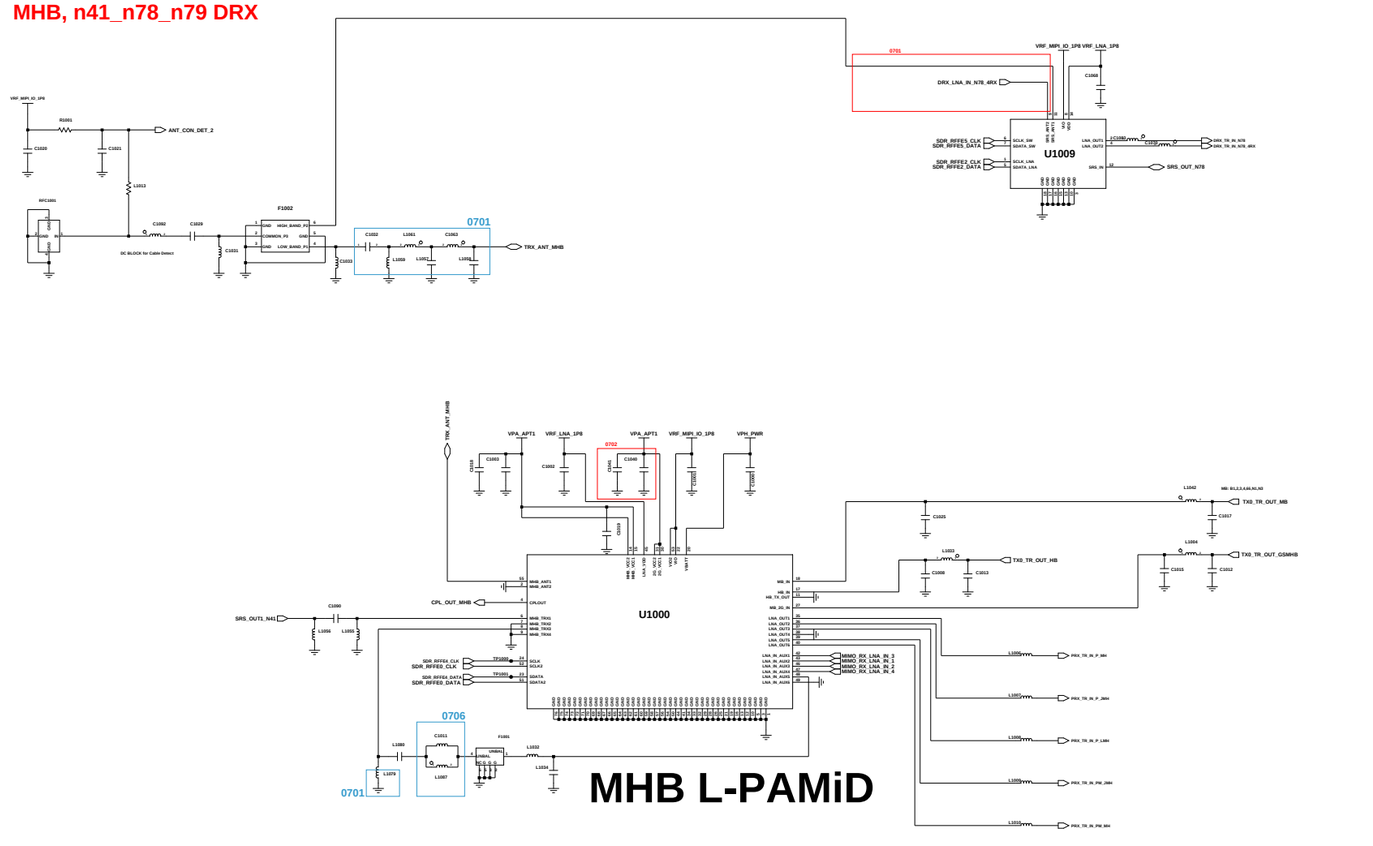

MHB L-PAMiD

SUB ANT1

LB DRX, B1/3 DRX MIMO

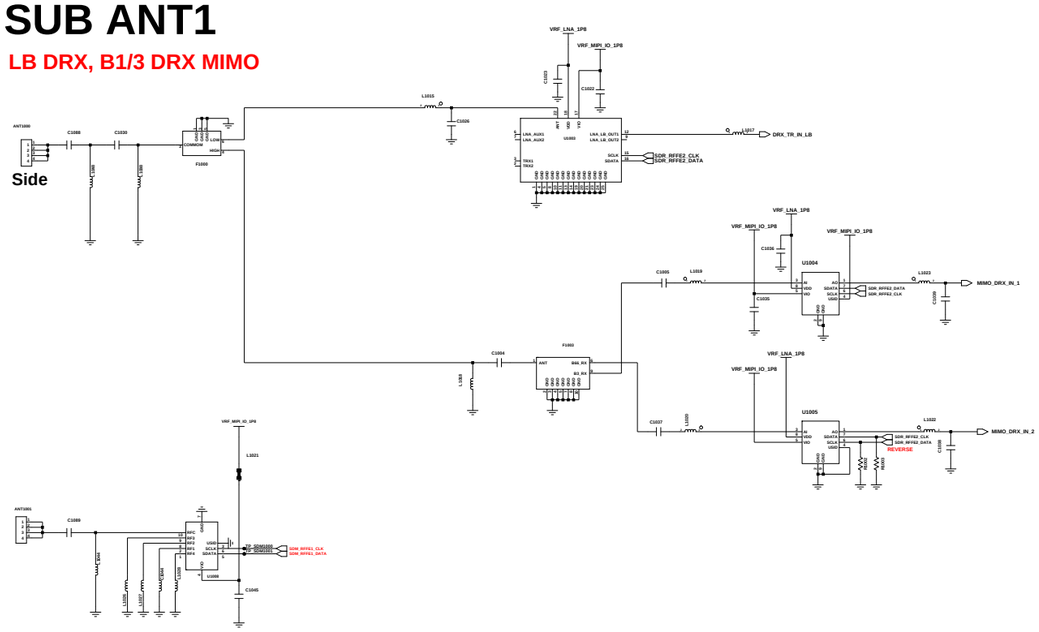

SUB ANT2

GPS, MHB DRX
N7/41 TRX
N1/3 TRX FOR MM/MH ENDC
WIFI 2.4G

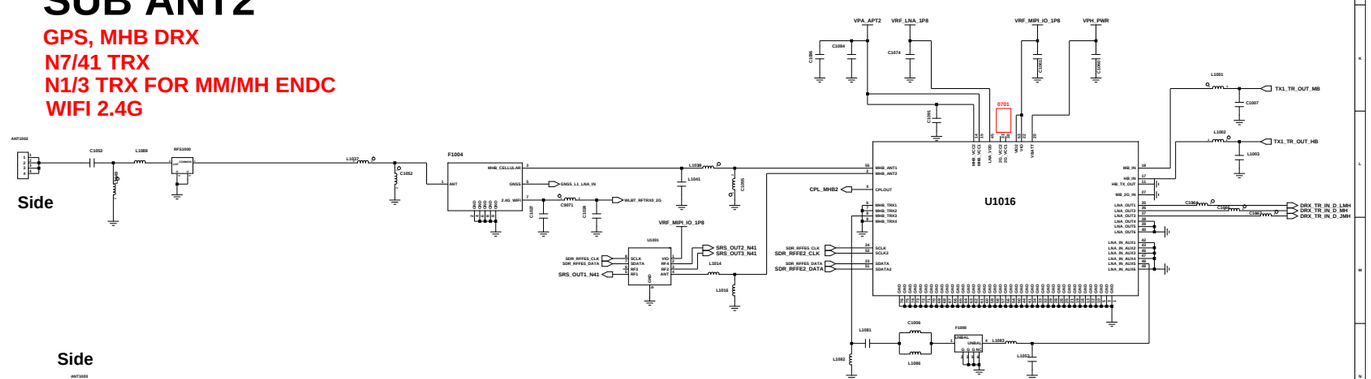

SUB ANT3

N78 TRX

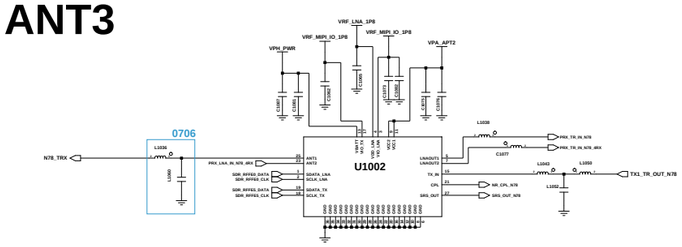

Engineer:	A52s 5G
Drawn by:	
RED CHK:	TITLE: RF PAM/FEM
DOC CTRL CHK:	
MFG DRAW CHK:	
QA CHK:	

Changed by | Date Changed | Time Changed | REV | Drawing Number:

SAMSUNG CONFIDENTIAL
THIS DOCUMENT CONTAINS CONFIDENTIAL
AND PROPRIETARY INFORMATION OF
SAMSUNG ELECTRONICS. THIS PROPERTY
DO NOT DISCLOSE TO OR DUPLICATE FOR OTHERS
EXCEPT AS AUTHORIZED BY SAMSUNG.

TRANSCEIVER(SDR735)

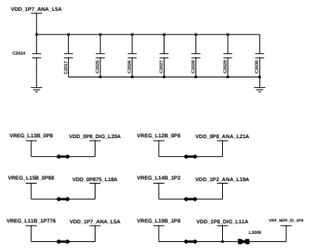

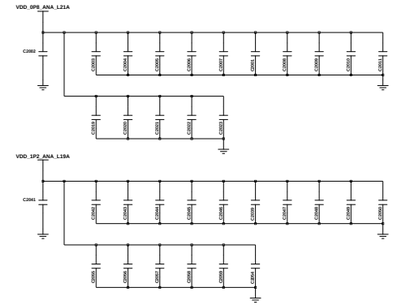

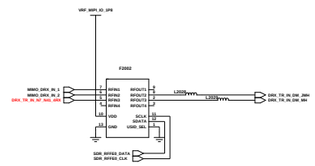

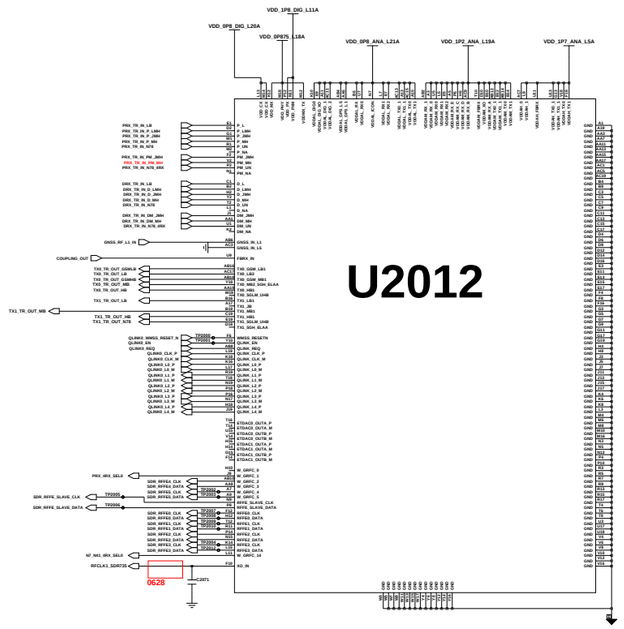

SUB ANT4 N79 TRX

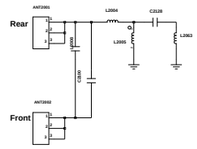

SUB ANT5 N7/79 PRX MIMO, N41 DRX MIMO

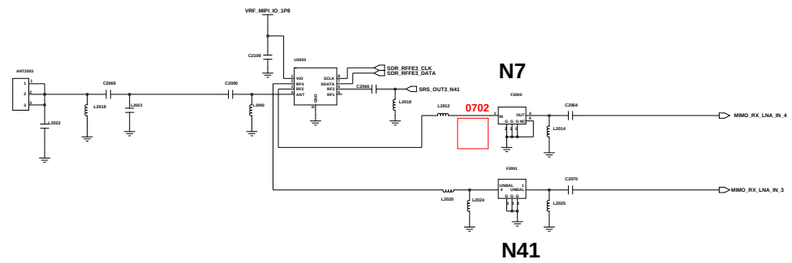

SUB ANT6 N78 PRX MIMO, B1/B3 PRX MIMO

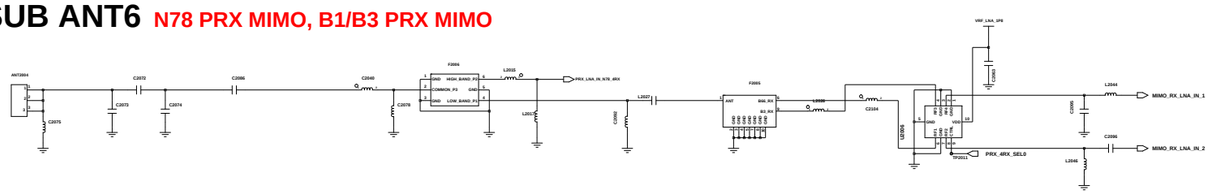

SUB ANT7 N7/78/79 DRX MIMO, N41 PRX MIMO

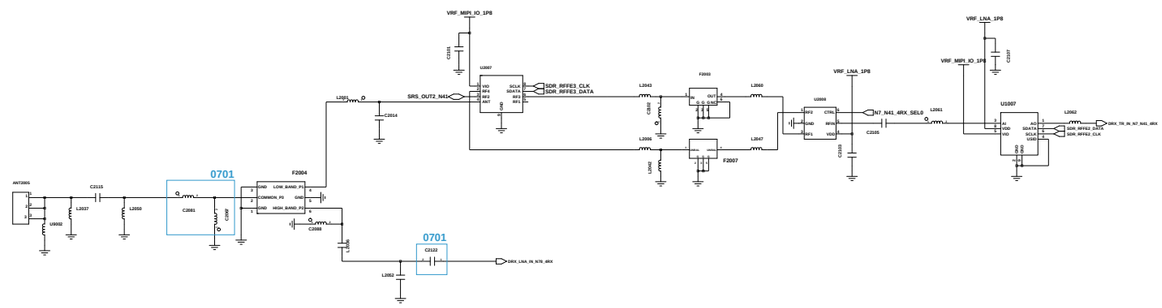

APT0

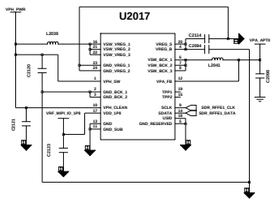

APT2

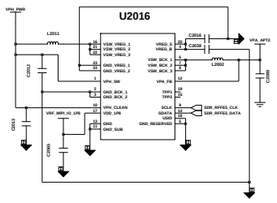

APT1

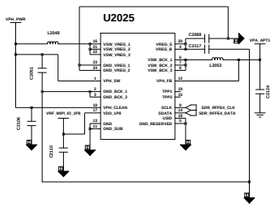

Coupling SW

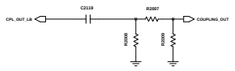

Engineer:	A52S 5G
Design by:	
PCB Code:	TITLE: RF TRCV/PAM/APT
DCK. Code:	
SPE Code:	
Changed by:	Date Changed:
Time Changed:	Q'ty Chk:
REV:	Drawing Number:

SAMSUNG CONFIDENTIAL
THIS DOCUMENT CONTAINS CONFIDENTIAL
PROPRIETARY INFORMATION THAT IS
SAMSUNG ELECTRONICS CO'S PROPERTY.
DO NOT DISCLOSE TO OR DUPLICATE FOR OTHERS
EXCEPT AS AUTHORIZED BY SAMSUNG.

WIFI/BT/FM

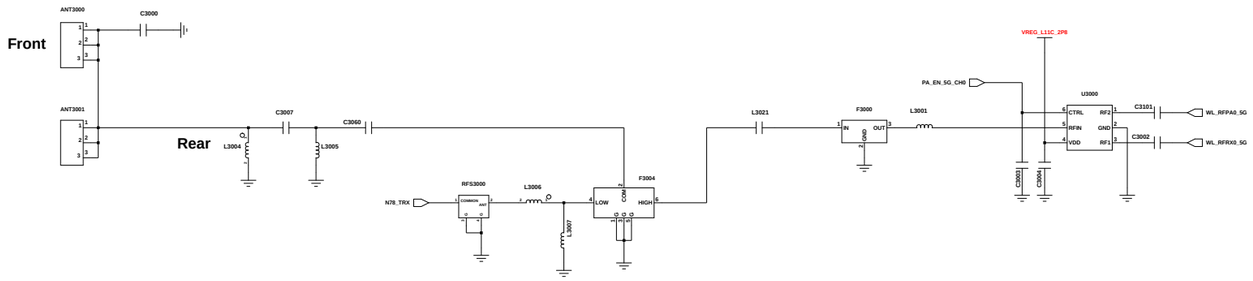

SUB ANT3

N78 TRX

WIFI 5G

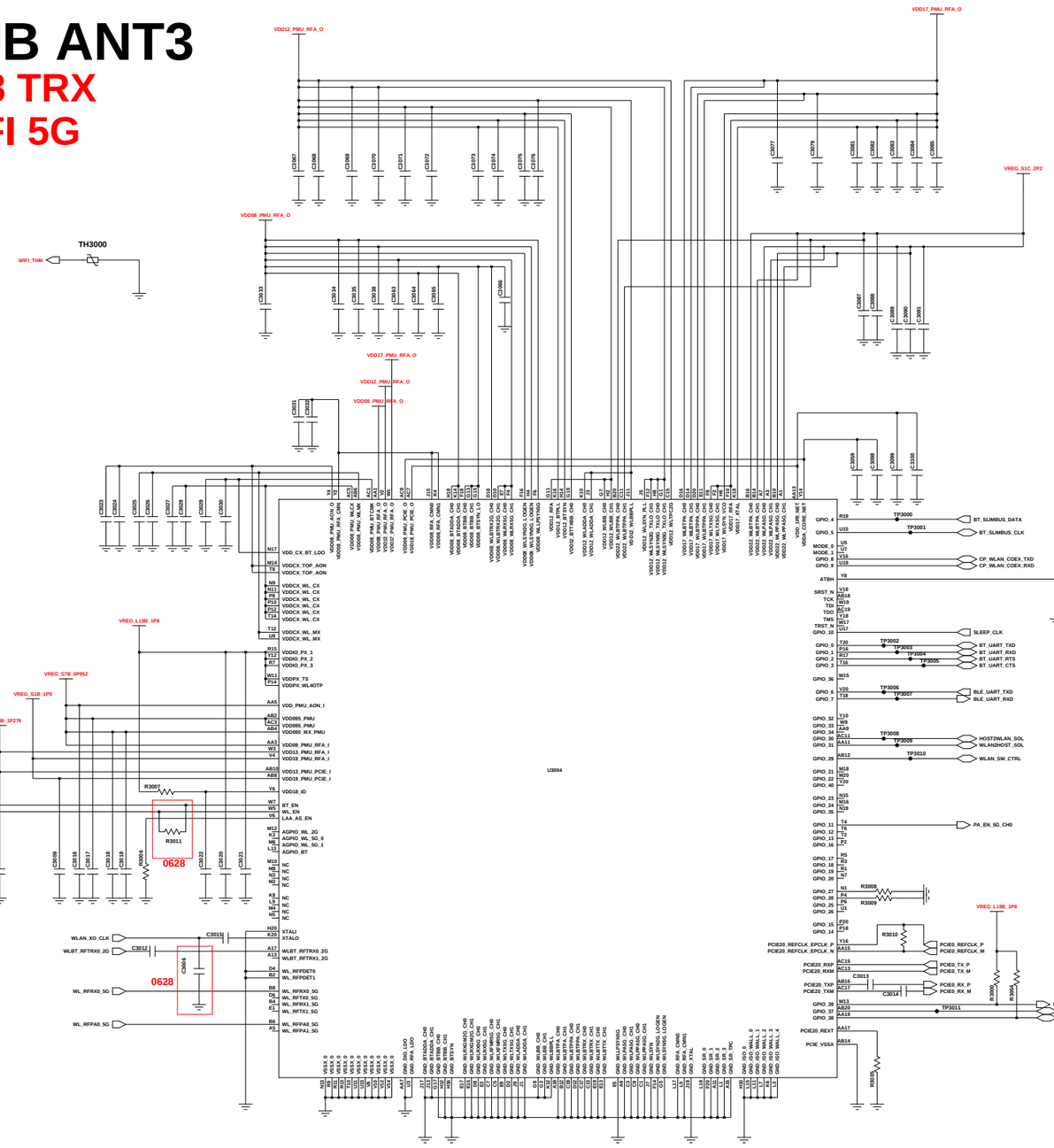

GPS L1 / GNSS/BEIDOU

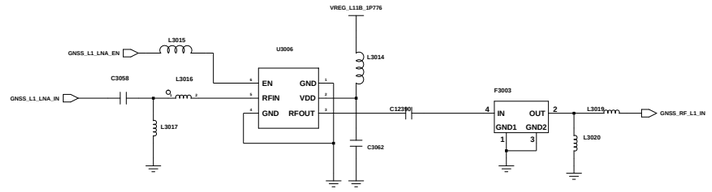

MST

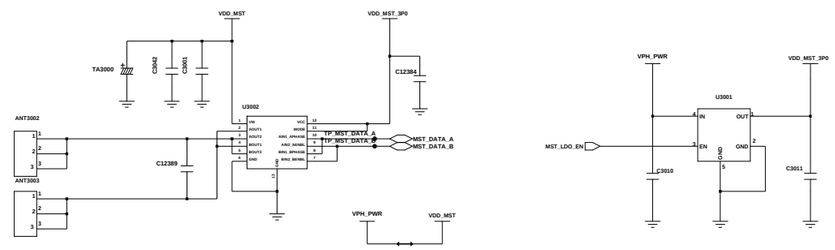

GND CCP

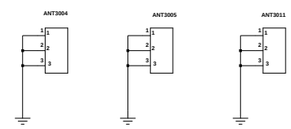

NFC

eSE : SN4V
UICC : RN4V

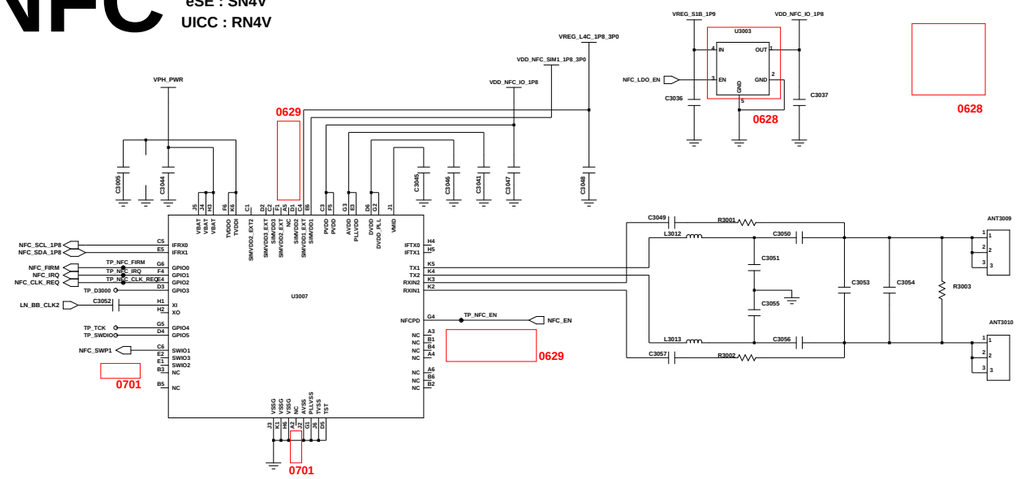

Engineer:					
Drawn by:					
R&D CHK:					
DOC CTRL CHK:					
MFG ENGR CHK:					
Changed by: user118	Date Changed:	Time Changed:	QA CHK:	REV	Drawing Number:

TITLE: **A52s 5G**
WIFI/NFC/MST/GPS
Size:
Page: 3

SAMSUNG CONFIDENTIAL
THIS DOCUMENT CONTAINS CONFIDENTIAL PROPRIETARY INFORMATION THAT IS SAMSUNG ELECTRONICS CO'S PROPERTY. DO NOT DISCLOSE TO OR DUPLICATE FOR OTHERS EXCEPT AS AUTHORIZED BY SAMSUNG.

SM7325

(INTERFACE, GPIO)

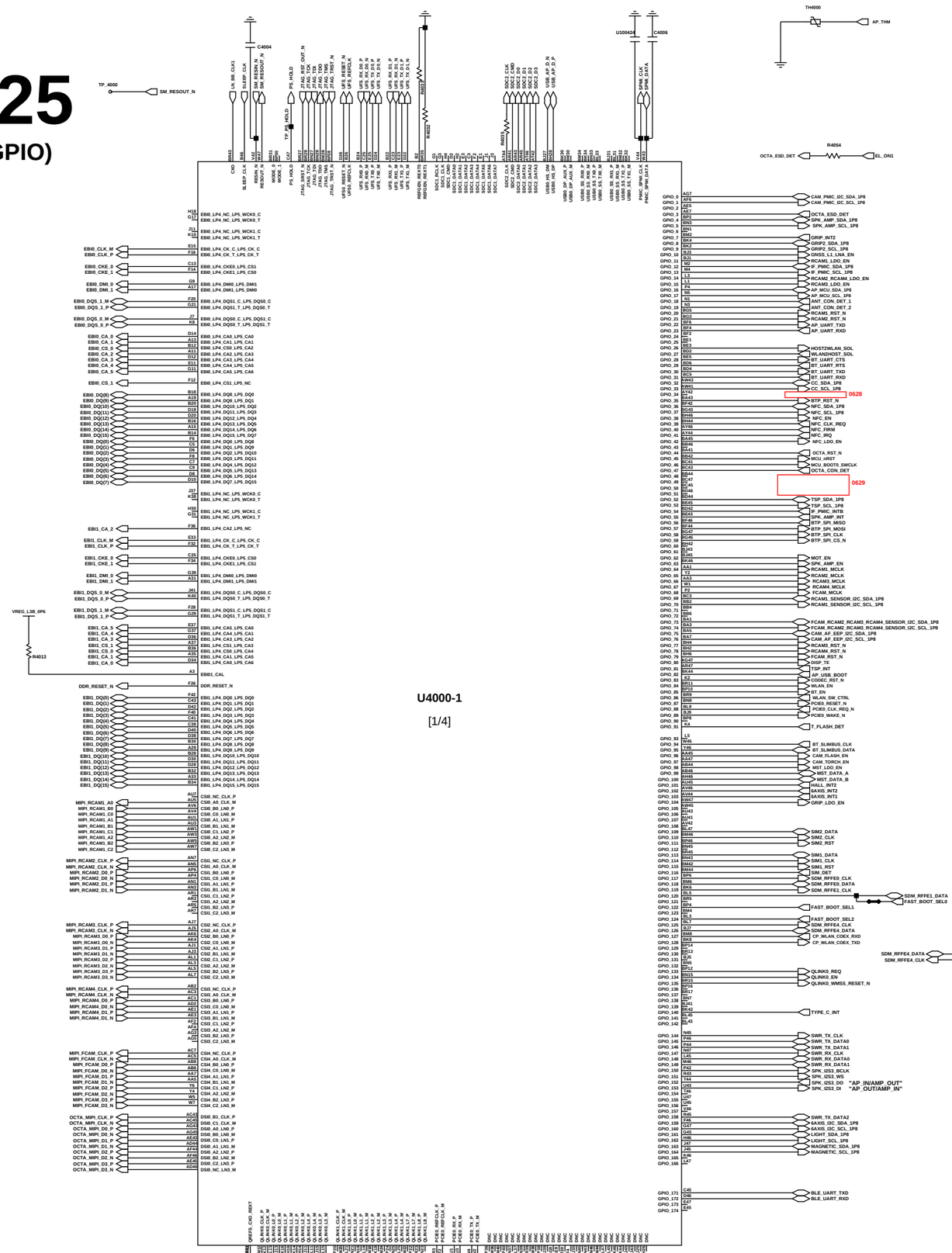

I2C PULL UP

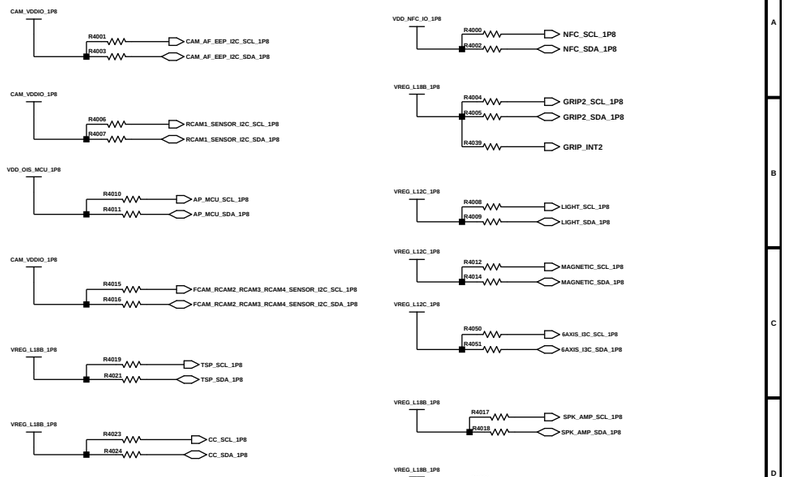

MEMORY

6GB/128GB

8GB/128GB

8GB/256GB

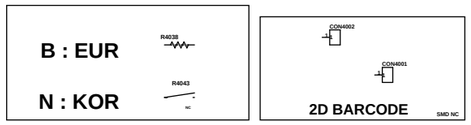

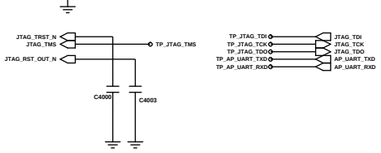

JTAG CON

(3711-001713 / AXE612124)

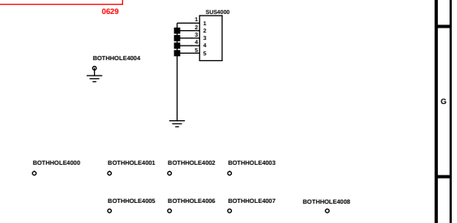

BOSS HOLE

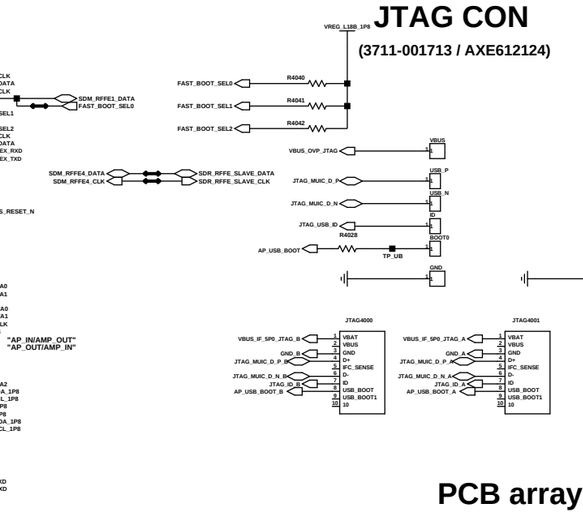

PCB array JTAG

Engineer			
Drawn By:			A52s 5G
R&D CHK:			TITLE: AP/CP
DOC CTRL CHK:			
MFG ENGR CHK:			
Changed by:	Date Changed:	Time Changed:	QA CHK:
Size			Drawing Number

SAMSUNG CONFIDENTIAL
THIS DOCUMENT CONTAINS CONFIDENTIAL
AND PROPRIETARY INFORMATION OF
SAMSUNG ELECTRONICS CO. LTD. PROPERTY.
DO NOT DISCLOSE TO OR DUPLICATE FOR OTHERS
EXCEPT AS AUTHORIZED BY SAMSUNG.

SM7325
(POWER, GND)

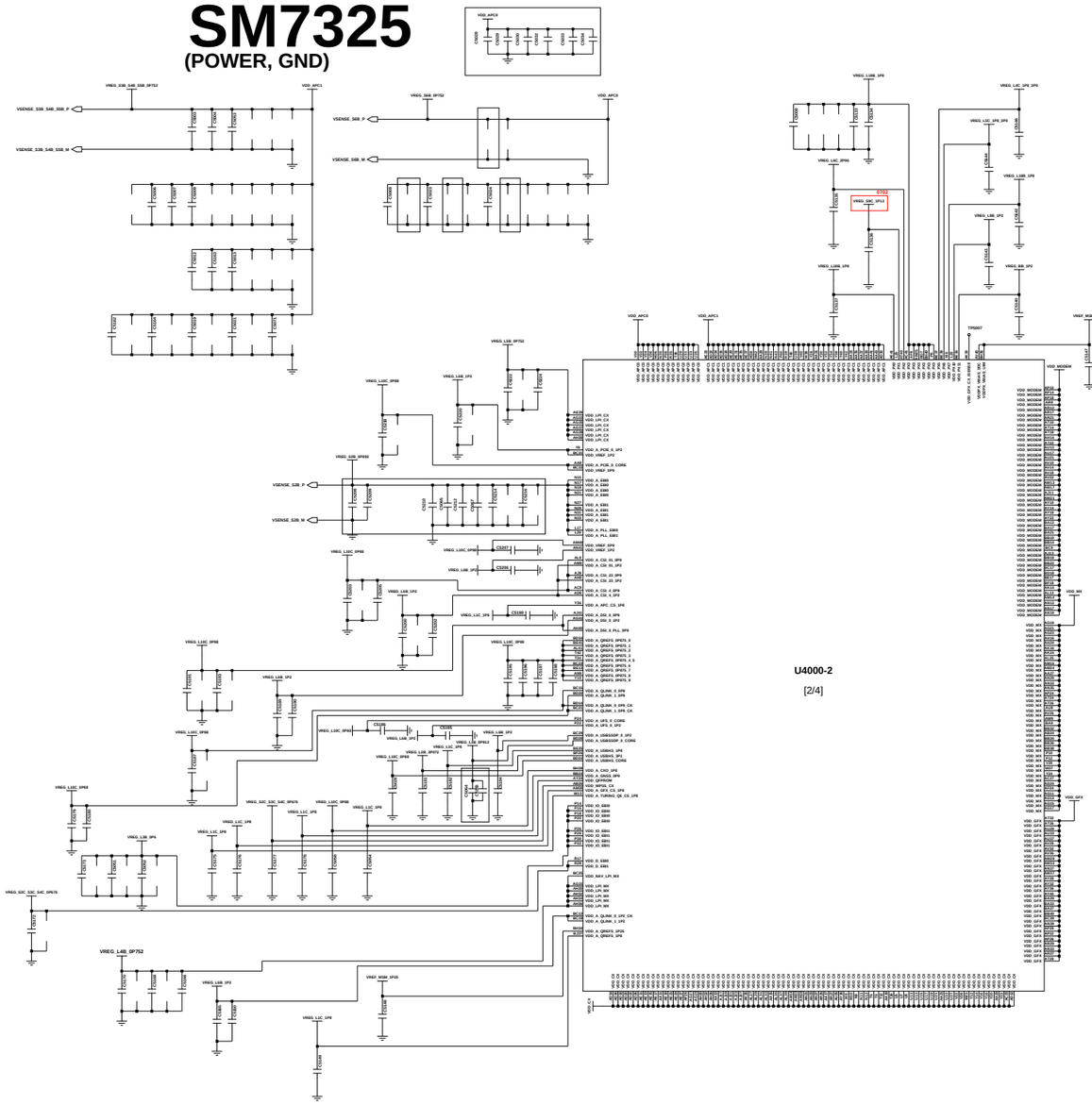

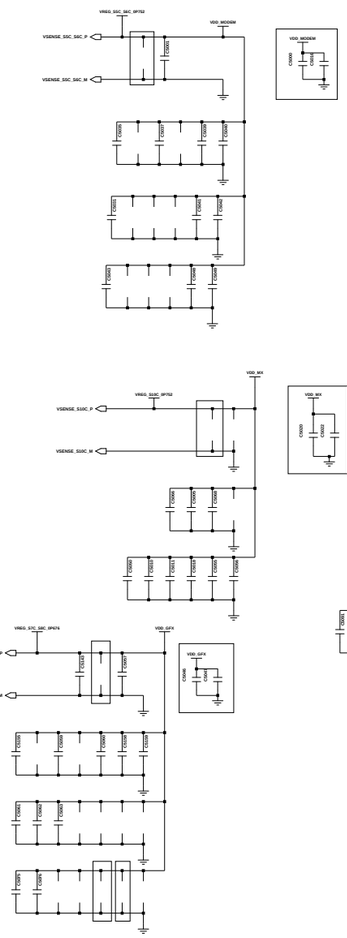

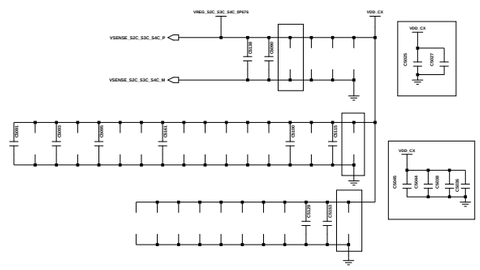

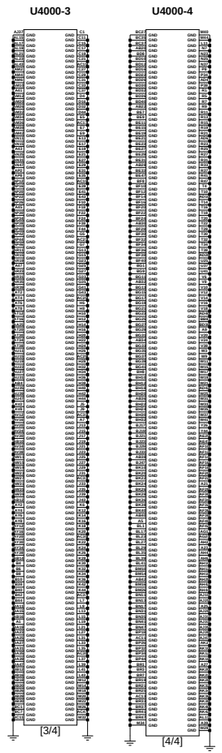

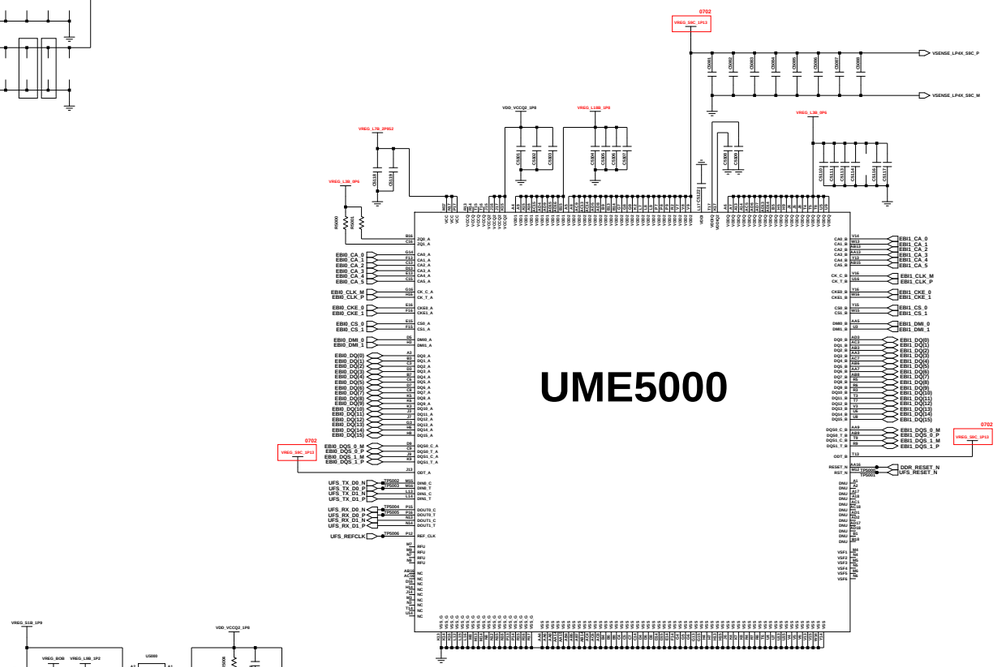

6GB + 128GB uMCP

6GB + 128GB uMCP : 1108-000677
8GB + 128GB uMCP : 1108-000675
8GB + 258GB uMCP : 1108-000699

Engineer:	A52s 5G
Drawn by:	
R&D CHK:	TITLE: AP/CP/uMCP
DOC CTRL CHK:	
MFG DOCS CHK:	
Q/A CHK:	

Changed by | Date Changed: | Time Changed: | REV | Drawing Number:

SAMSUNG CONFIDENTIAL
THIS DOCUMENT CONTAINS CONFIDENTIAL
AND PROPRIETARY INFORMATION OF
SAMSUNG ELECTRONICS CO'S PROPERTY.
DO NOT DISCLOSE TO OR DUPLICATE FOR OTHERS
EXCEPT AS AUTHORIZED BY SAMSUNG.

PMIC (PM7325/PM7350C)

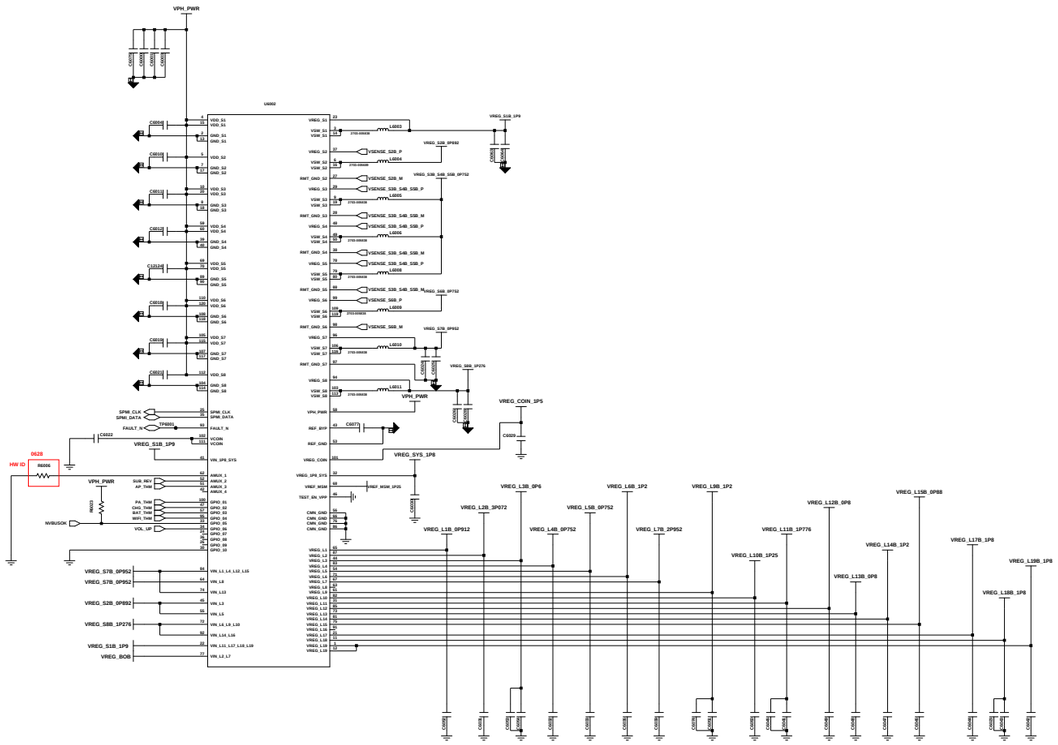

H/W ID TABLE

HW ID	REV	VALUE	COMMENT
00	BU	12K	BRING UP
01	REV00	20K	PrePV
02	REV01	30K	PV1
03	REV02	51K	PV2
04		68K	
05		82K	
06		100K	
07		120K	
08		150K	
09		200K	

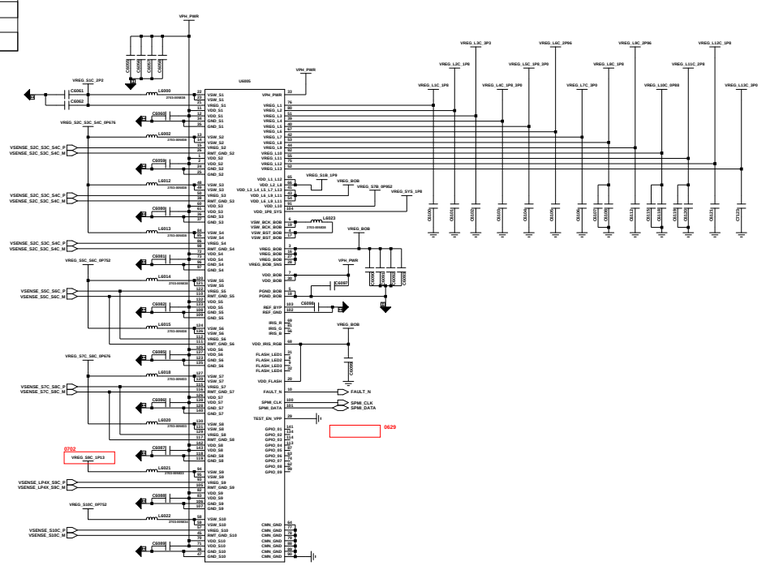

DIRECT CHARGER

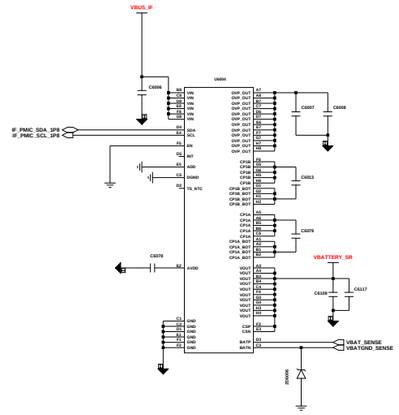

IF PMIC

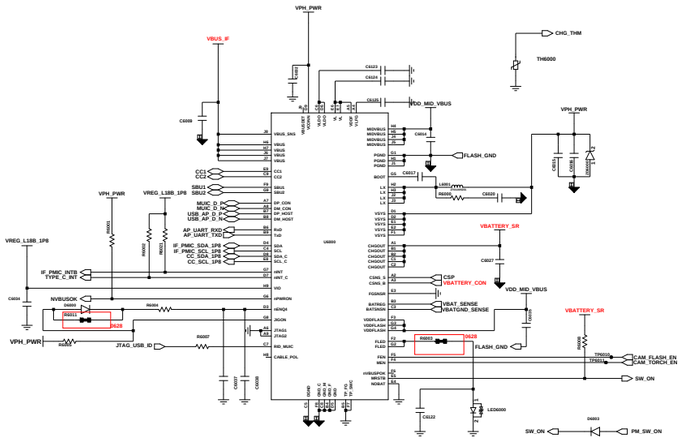

OVP

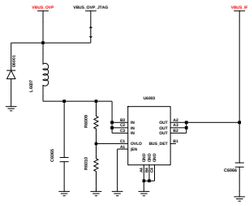

CLOCK GEN

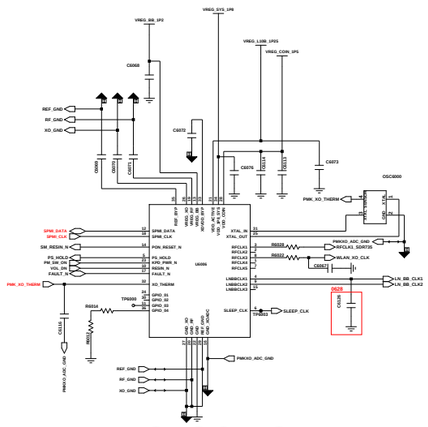

MOTOR

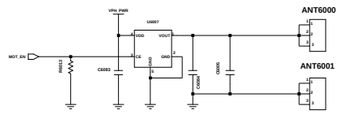

BATTERY CON

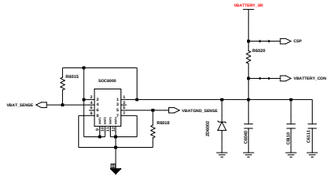

POWER & VOL KEY

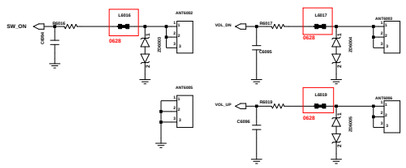

Engineer:	A52s 5G
Issued by:	
R&D Coir.:	TITLE: POWER/MOT/KEY
DOC CTRL Coir.:	
MFG ENGR Coir.:	
Q/A Coir.:	REV: Drawing Number:

Changed by: | Date Changed: | Time Changed:

SAMSUNG CONFIDENTIAL
THIS DOCUMENT CONTAINS CONFIDENTIAL PROPRIETARY INFORMATION THAT IS SAMSUNG ELECTRONICS CO'S PROPERTY. DO NOT DISCLOSE TO OR DUPLICATE FOR OTHERS EXCEPT AS AUTHORIZED BY SAMSUNG.

AUDIO & SENSOR PART

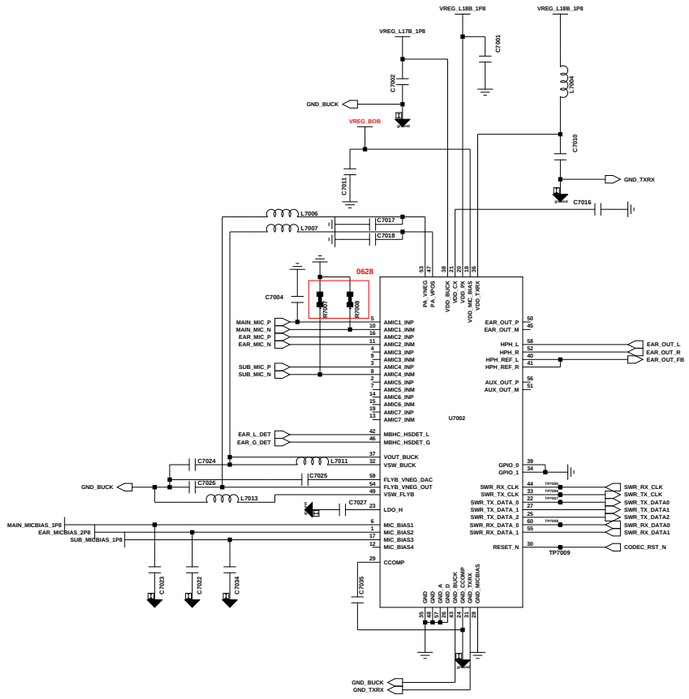

CODEC

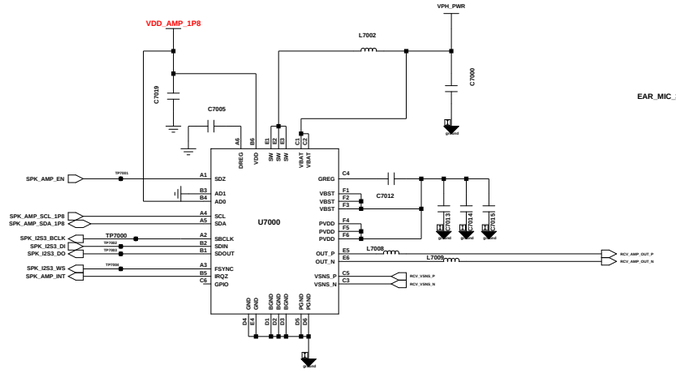

RCV AMP

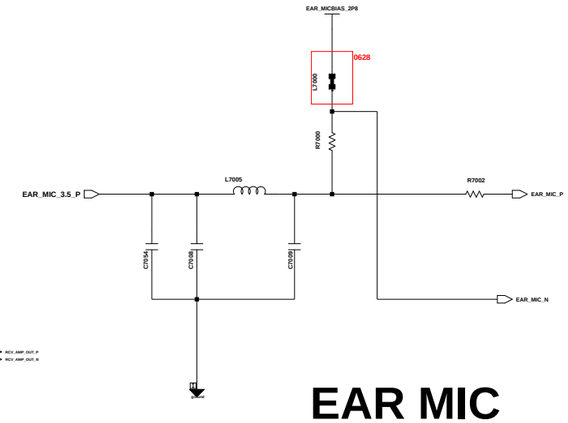

EAR MIC

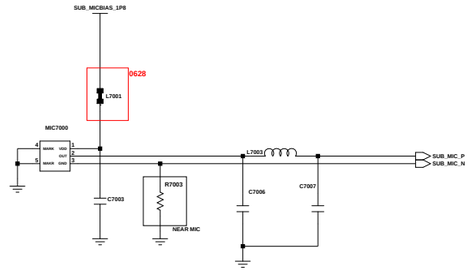

2nd MIC

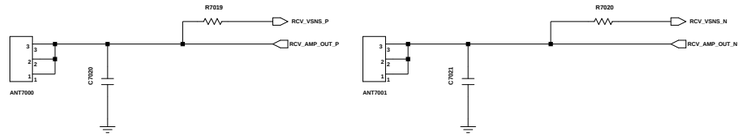

RCV CONTACT

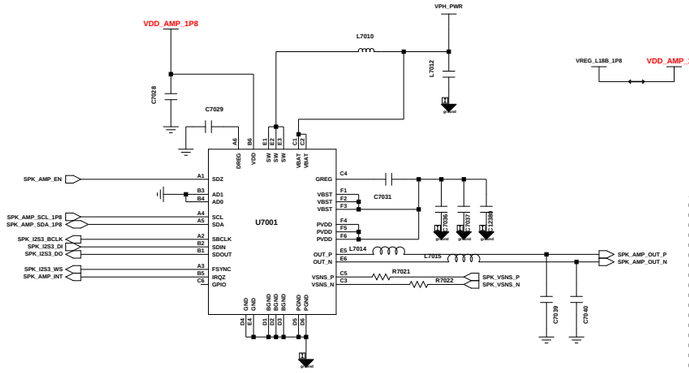

SPK AMP

SENSOR

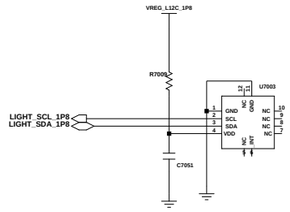

AMBIENT SENSOR

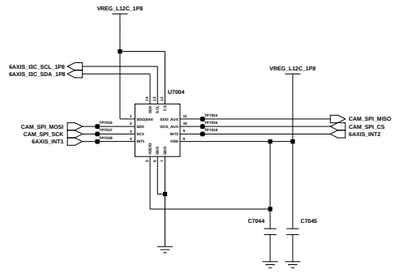

ACC&GYRO SENSOR

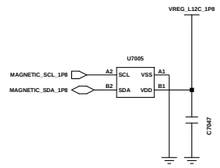

MAGNETIC SENSOR

DUAL SIM / T-FLASH (3in2)

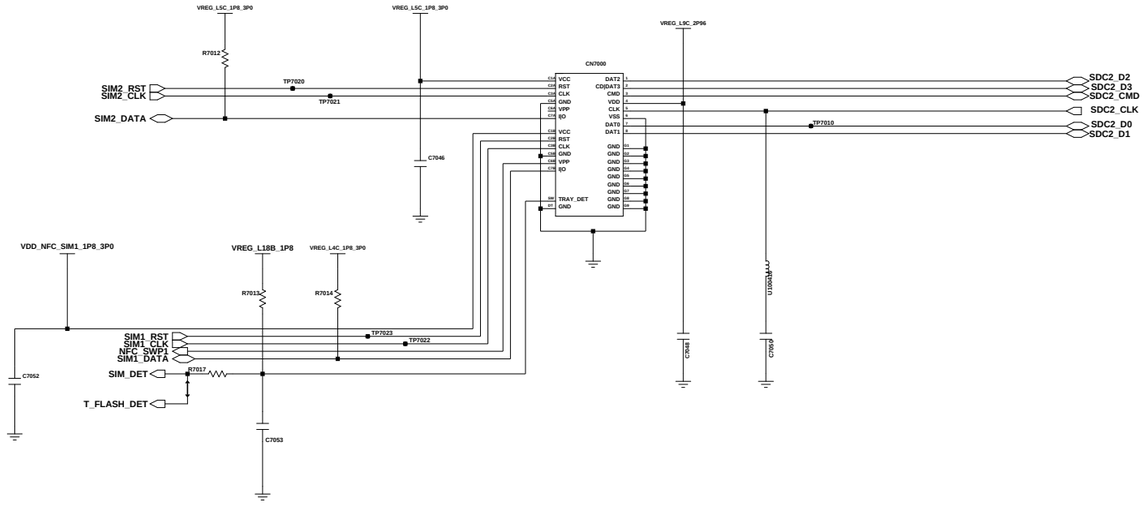

Engineer:	A52s 5G		
Drawn by:			
R&D CHK:	TITLE:	Size:	
DOC CTRL CHK:			
MFG ENGR CHK:			
QA CHK:	REV:	Drawing Number:	Page:

Changed by:	Date Changed:	Time Changed:

SAMSUNG CONFIDENTIAL
THIS DOCUMENT CONTAINS CONFIDENTIAL
PROPRIETARY INFORMATION THAT IS
SAMSUNG ELECTRONICS CO'S PROPERTY.
DO NOT DISCLOSE TO OR DUPLICATE FOR OTHERS
EXCEPT AS AUTHORIZED BY SAMSUNG.

CAMERA

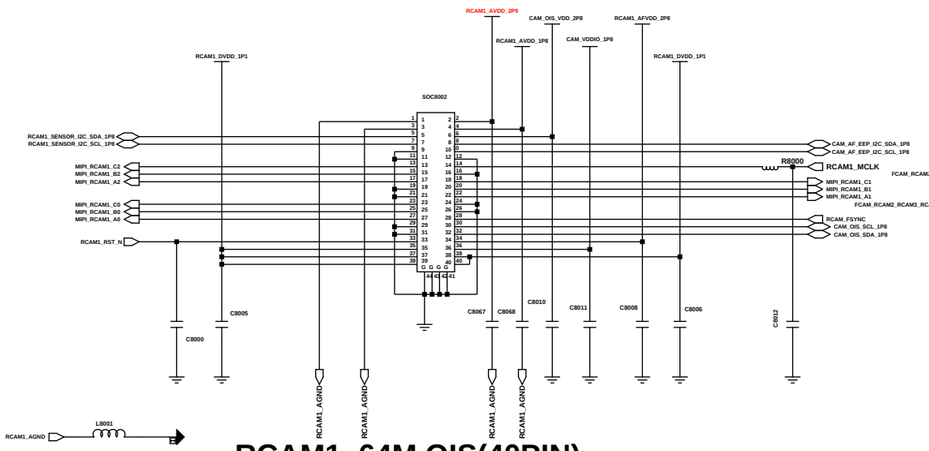

RCAM1_64M OIS(40PIN)

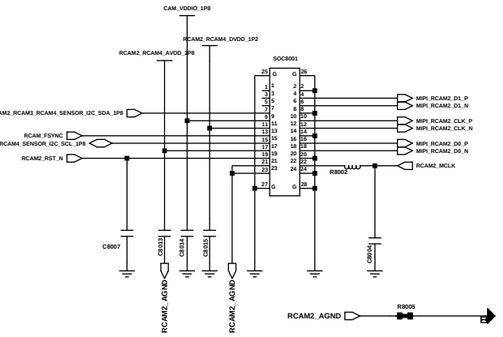

RCAM2_5M_BOKEH_CAMERA(24PIN)

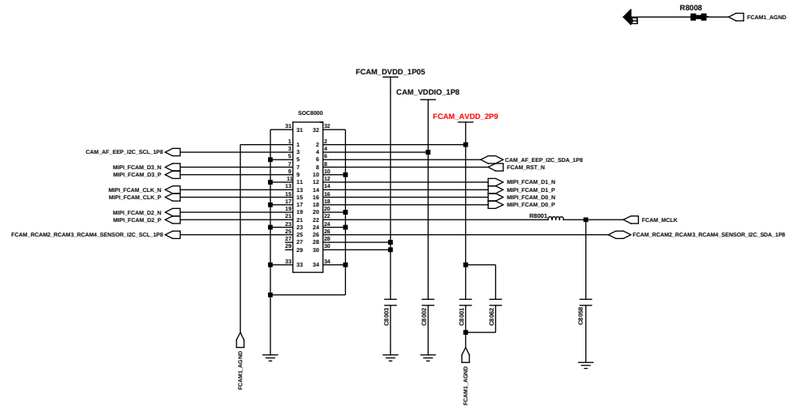

FRONT_32M CAMERA (30PIN)

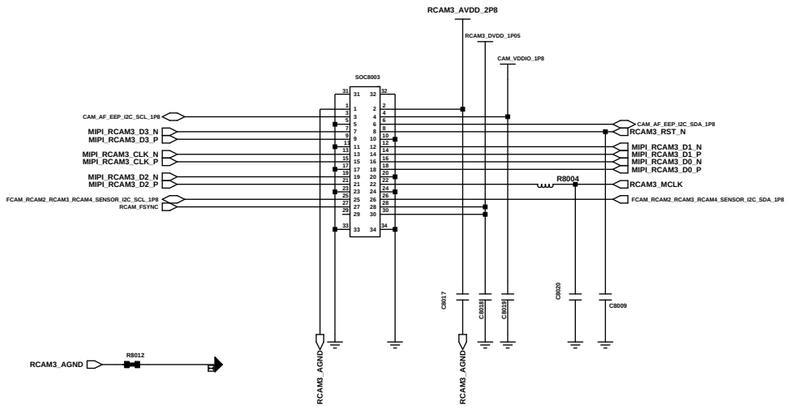

RCAM3_SUPER WIDE_12M CAMERA(30pin)

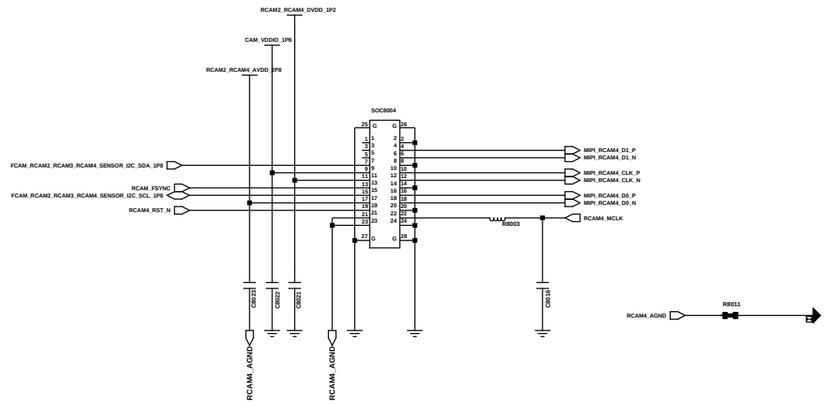

RCAM4_5M_MACRO_CAMERA(24PIN)

MIPI SWITCH (RCAM3,RCAM4)

CAM MCU

CAM PMIC

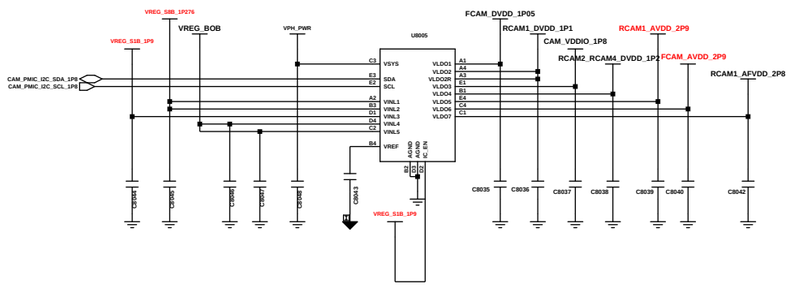

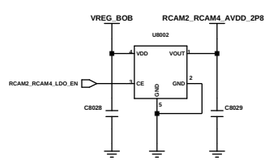

RCAM2_RCAM4_AVDD

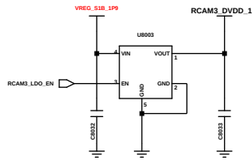

RCAM3_DVDD

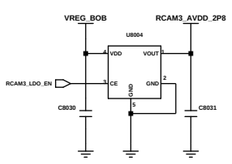

RCAM3_AVDD

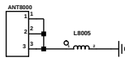

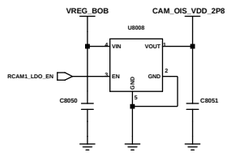

RCAM1_OIS

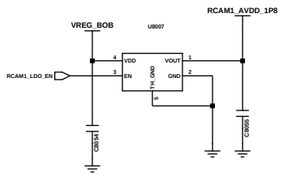

RCAM1_AVDD

@REV01

RCAM4_AVDD RCAM4_DVDD

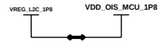

CAM MCU_DVDD

Engineer:			A52s 5G
Drawn by:			
R&D CHK:		TITLE:	CAMERA
DOC CTRL CHK:			
MFG ENGR CHK:			
QA CHK:		REV	Drawing Number:

Changed by: | Date Changed: | Time Changed:

Size: | Page: 7/8

SAMSUNG CONFIDENTIAL
THIS DOCUMENT CONTAINS CONFIDENTIAL
PROPRIETARY INFORMATION THAT IS
SAMSUNG ELECTRONICS CO'S PROPERTY.
DO NOT DISCLOSE TO OR DUPLICATE FOR OTHERS
EXCEPT AS AUTHORIZED BY SAMSUNG.

C2C (Conn to Conn FPCB)

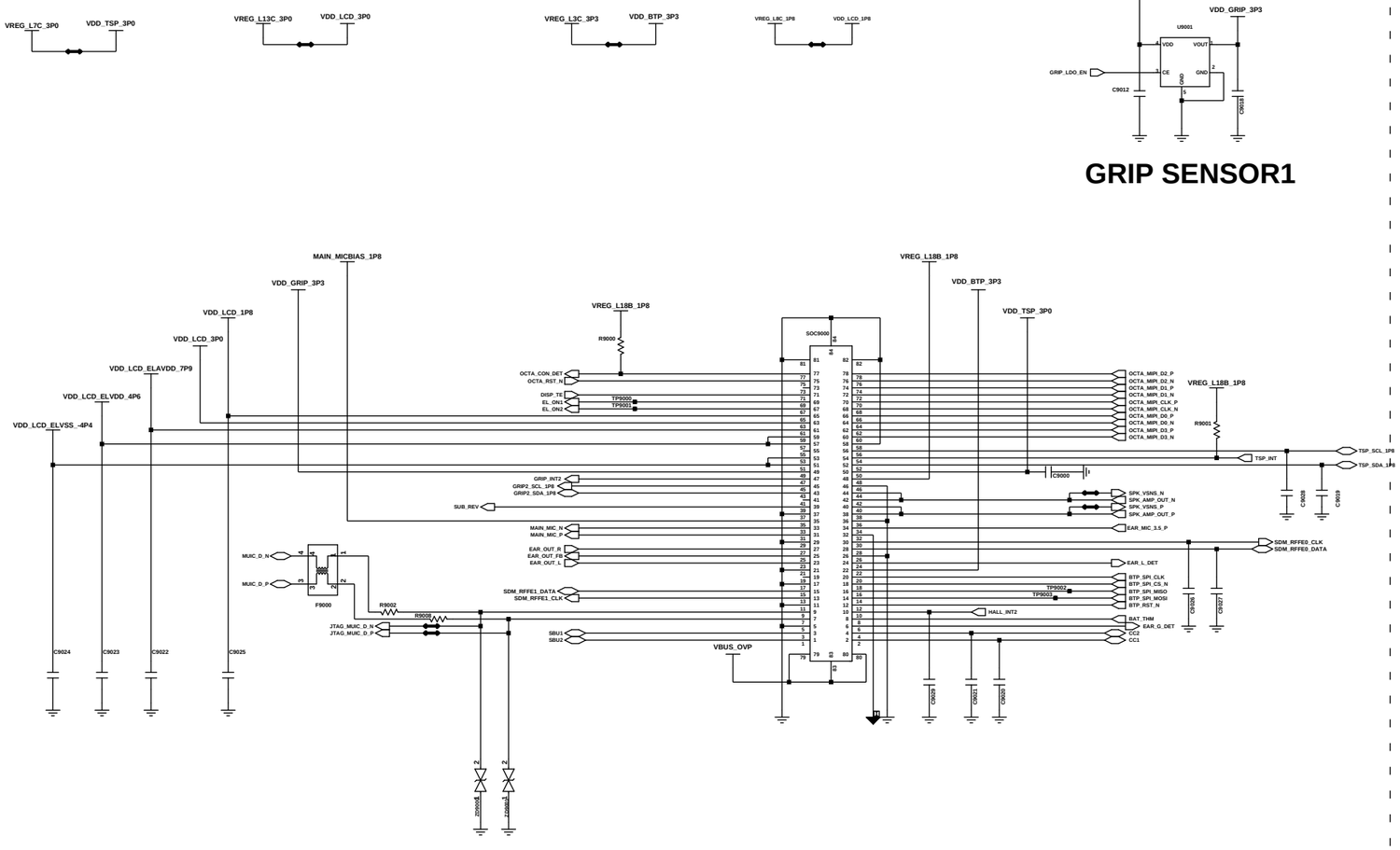

GRIP SENSOR1

SHIELD CAN/BOTH HOLE

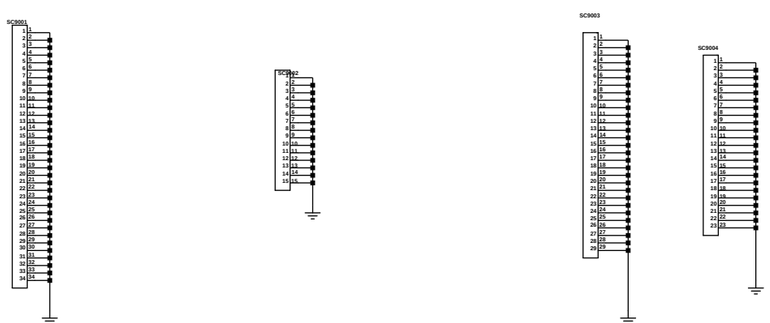

DISPLAY

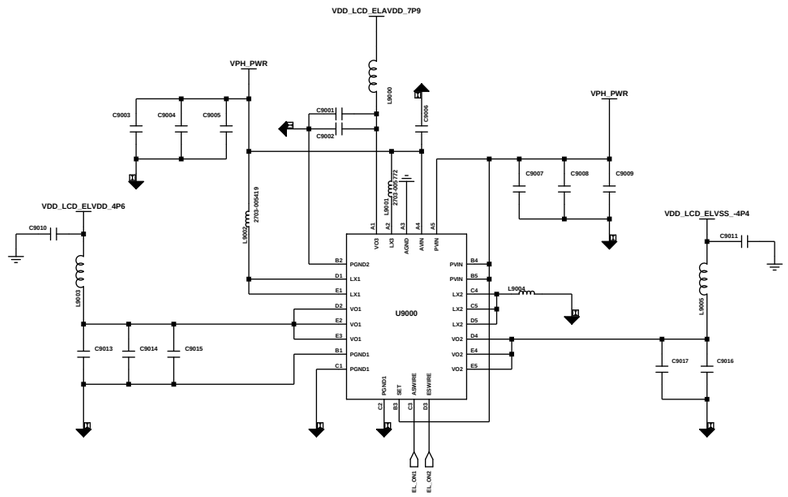

DISPLAY PMIC

Engineer:	A52s 5G
Drawn by:	
R&D CHK:	TITLE:
DOC CTRL CHK:	Size:
MFG ENGR CHK:	
QA CHK:	REV: Drawing Number: Page:

Changed by: user28 | Date Changed: Thursday, June 18, 2015 | Time Changed: 10:18:28 am

SAMSUNG CONFIDENTIAL
THIS DOCUMENT CONTAINS CONFIDENTIAL
AND PROPRIETARY INFORMATION OF
SAMSUNG ELECTRONICS CO'S PROPERTY.
DO NOT DISCLOSE TO OR DUPLICATE FOR OTHERS
EXCEPT AS AUTHORIZED BY SAMSUNG.

A52S_5G_SUB_REV0.3

BAT_THM

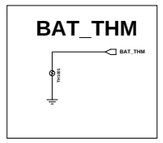

IF CON (TYPE-C)

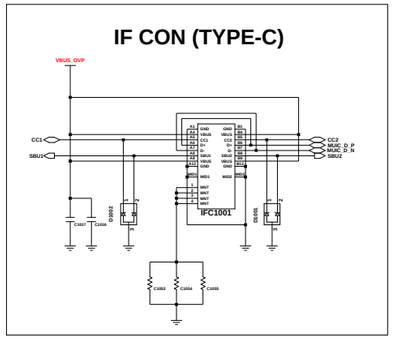

SPK

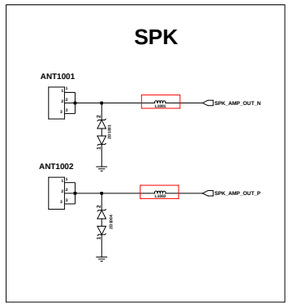

BTP CON

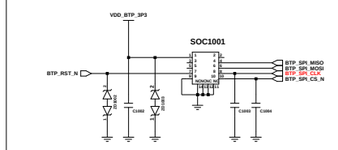

MAIN ANTENNA (LB) MAIN1

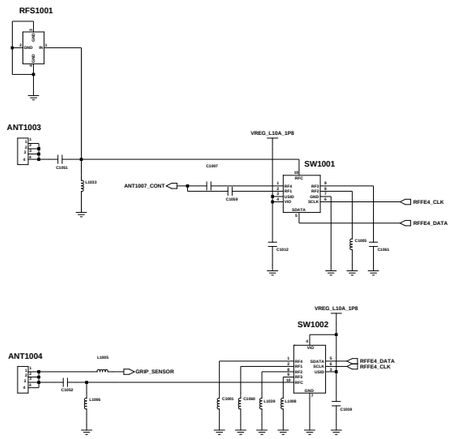

MIC

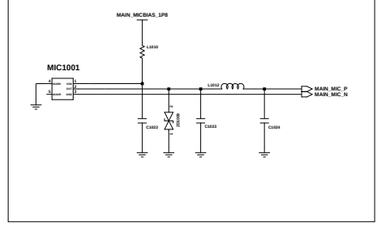

HALL_IC

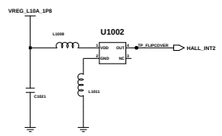

GRIP SENSOR

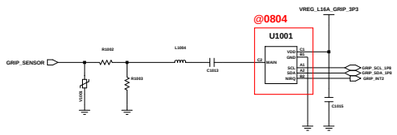

MAIN ANTENNA (MB, HB) MAIN2

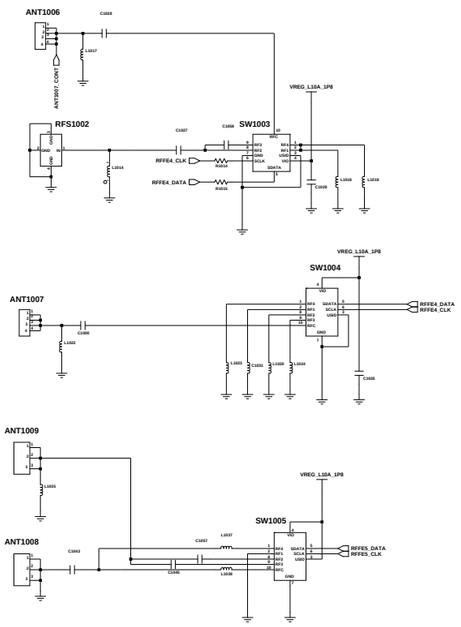

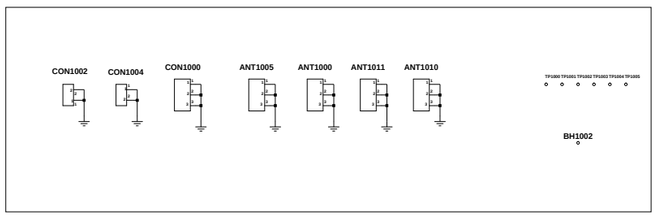

ID	PU_R	PD_R	Model
1	100k	30k	
2	120k	68k	A52S_5G_Global
3	100k	100k	
4	100k	150k	
5	100k	332k	
6	100k	open	A52_5G_USA

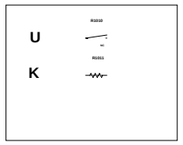

EAR JACK

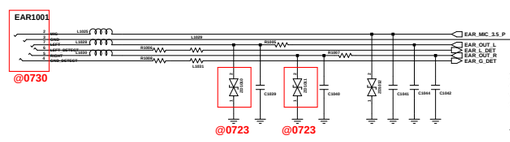

FM_LNA

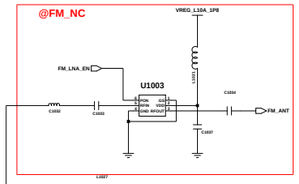

MAIN FPCB

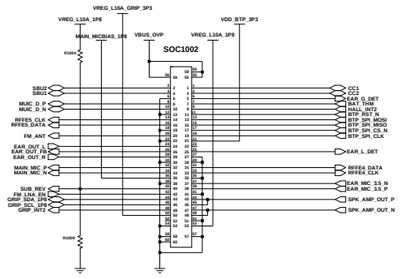

Engineer:	
Drawn by:	
R&D CHK:	TITLE:
DOC CTRL CHK:	
MFG ENGR CHK:	
QA CHK:	SIZE: / Drawing Number: / Page:

Changed by: | Date Changed: | Time Changed:

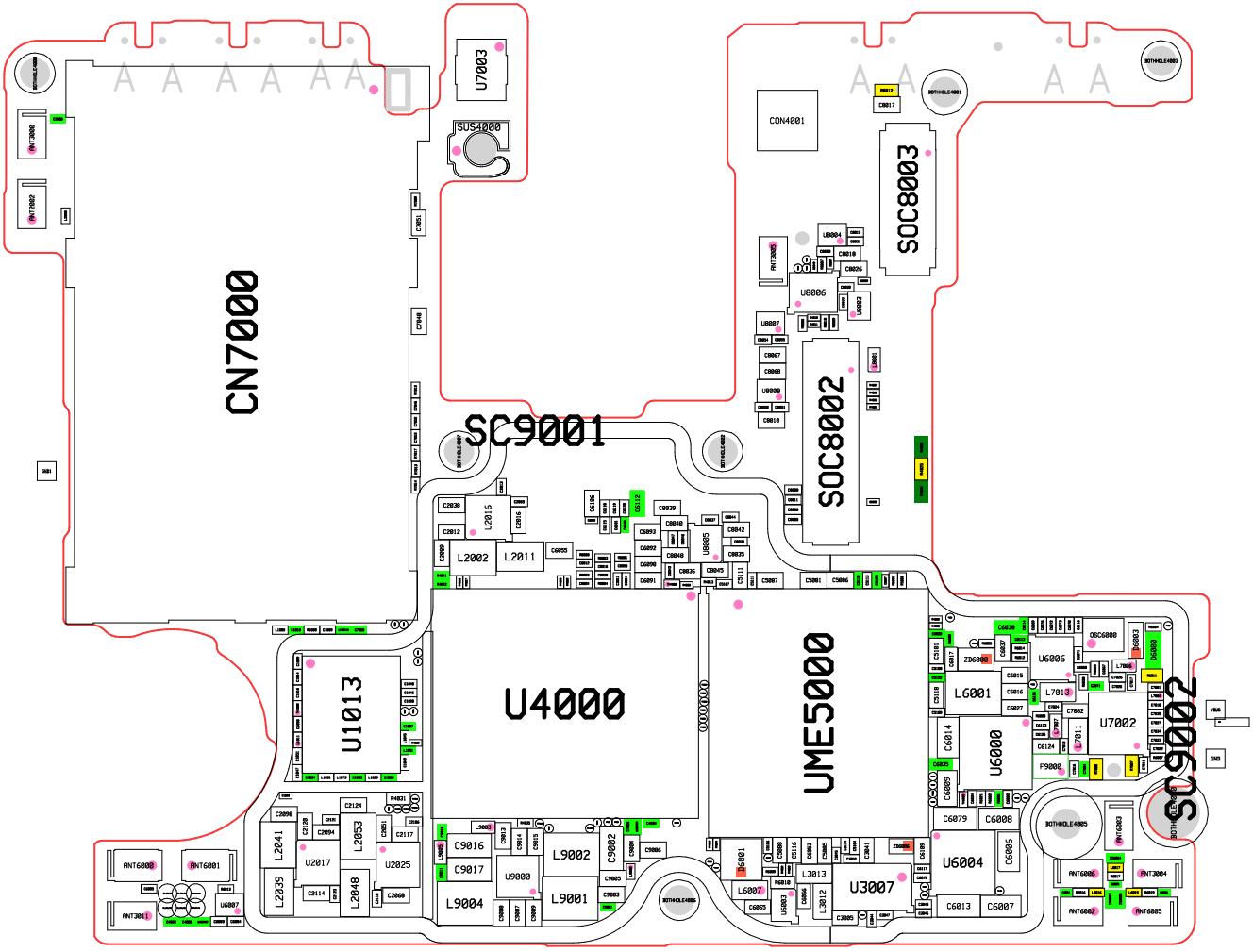
CN7000
U7003
SUS4000
SC9001
CON4001
SOC8003
SOC8002
U4000
UME5000
U1013
U6000
U6004
U3007
U7002
SC9002
L6001
L7013
L9001
L9002
L9004
U9000
U2017
U2025
U2016
L2002
L2011
L2041
L2039
L2053
L2048
U6006
U6007
U8006
U8007
U8008
U8004
U8003
U8005
U6005
U6006
U6007
U6008
U6013
U6014
U6015
U6016
U6017
U6018
U6019
U6020
U6021
U6022
U6023
U6024
U6025
U6026
U6027
U6028
U6029
U6030
U6031
U6032
U6033
U6034
U6035
U6036
U6037
U6038
U6039
U6040
U6041
U6042
U6043
U6044
U6045
U6046
U6047
U6048
U6049
U6050
U6051
U6052

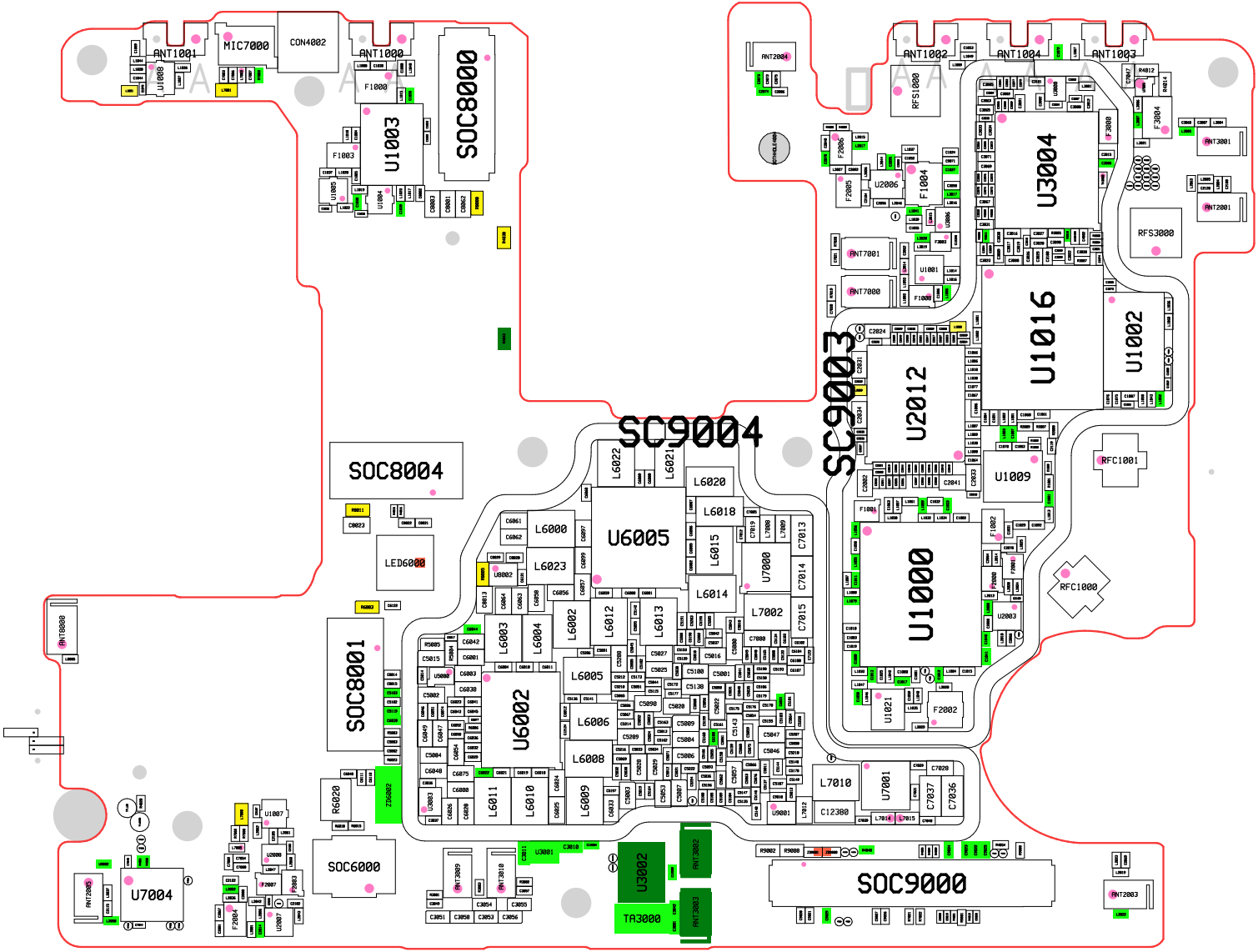
ANT1001
MIC7000
CON4002
ANT1000
SOC8000
F1000
U1003
F1003
U1005
U1004
ANT2004
ANT1002
ANT1004
ANT1003
RFS1000
U3004
F3004
ANT3001
ANT2001
RFS3000
F2006
F2005
U2006
F1004
ANT7001
ANT7000
U1001
F1008
U1016
U1002
SC9003
U2012
SC9004
SOC8004
LED6000
U6005
U1009
RFC1001
U1000
RFC1000
U2003
F2002
U1021
SOC8001
U6002
R6020
Z50002
SOC6000
U7004
ANT2005
ANT8000
U1007
U2008
F2007
F2003
F2004
U2007
ANT3009
ANT3010
U3001
U3002
TA3000
ANT3002
ANT3003
SOC9000
ANT2003
L7010
U7001
C7037
C7036
C12300
U9001